Project 4

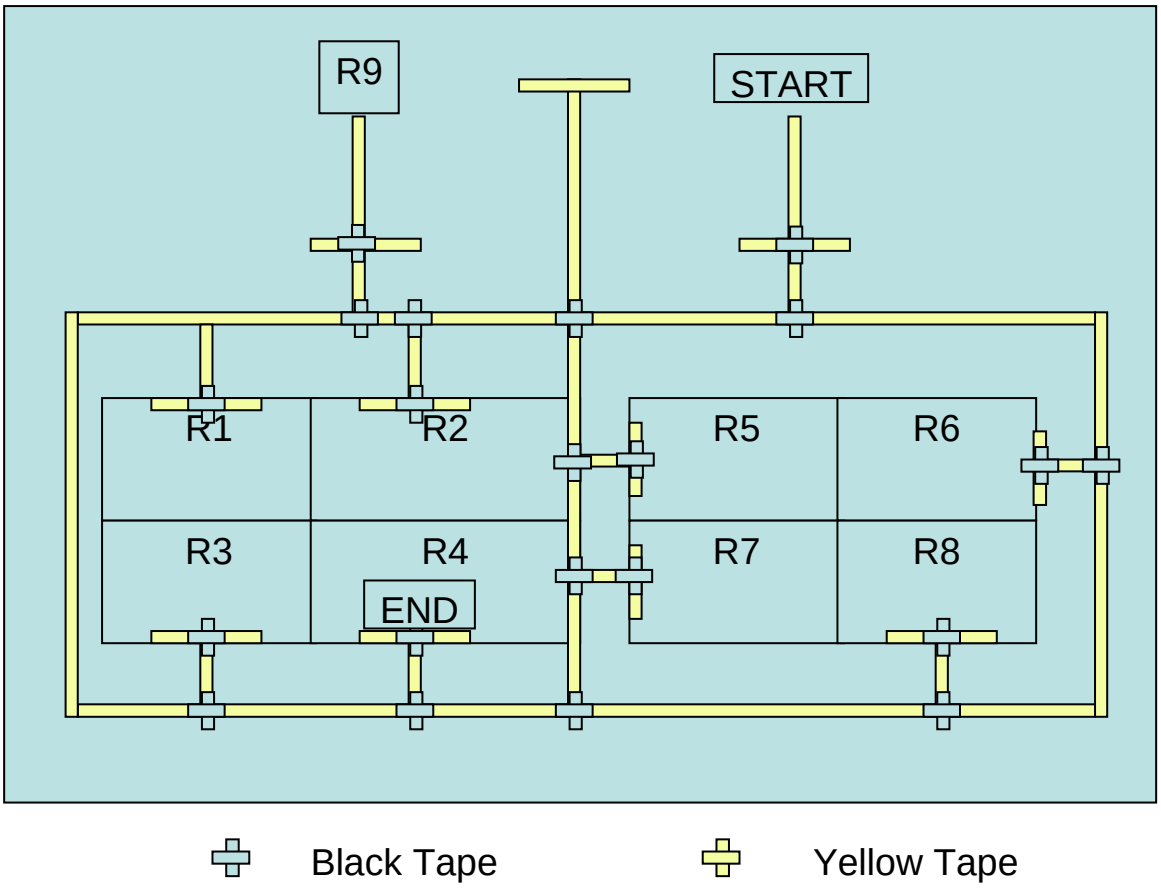

Develop a NQC program that moves the robot from location START to the location END.

Due date: on or before November 2, 2004.

Submit your source code to the Project 4 (accessible through the class web site, user name is your CS user id, password is the last four digits of your SSN)